REVISION				
REV.	ZONE	DESCRIPTION	DATE	DRAWNBY
A		INITIAL RELEASE	10/9/2025	A. AZAR

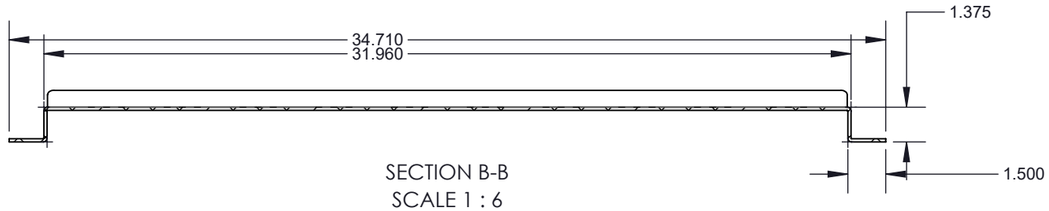

SECTION B-B
SCALE 1 : 6

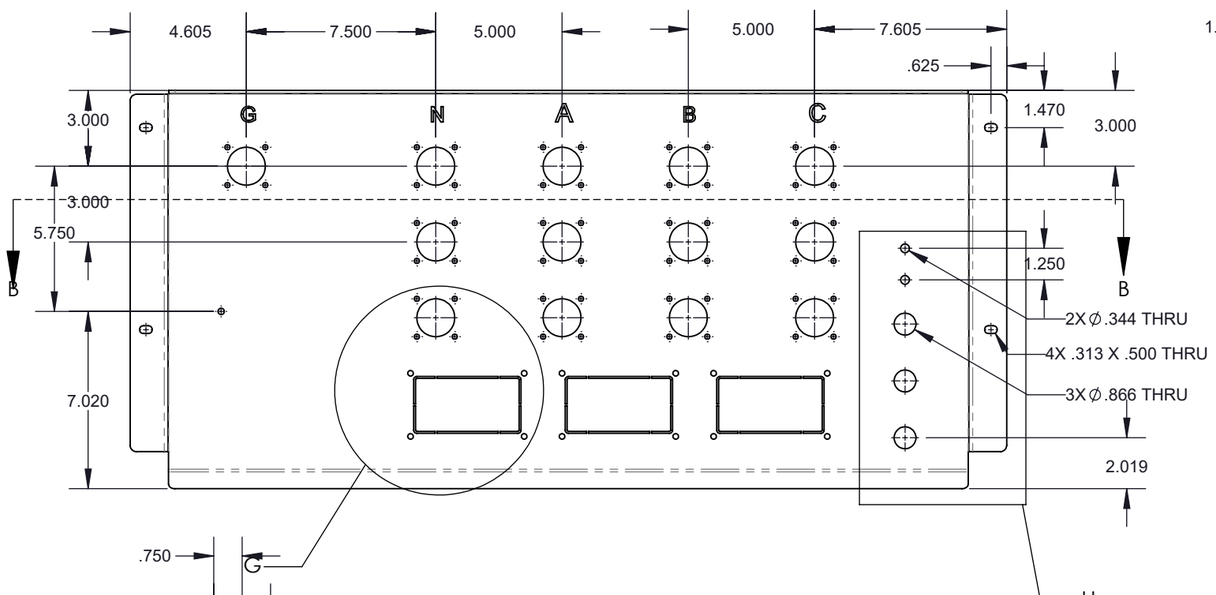

DETAIL G
SCALE 1 : 4

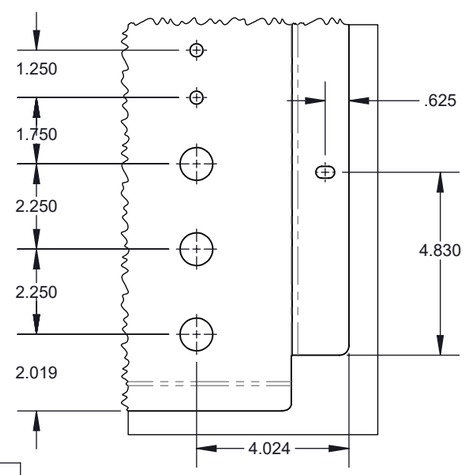

DETAIL H
SCALE 1 : 4

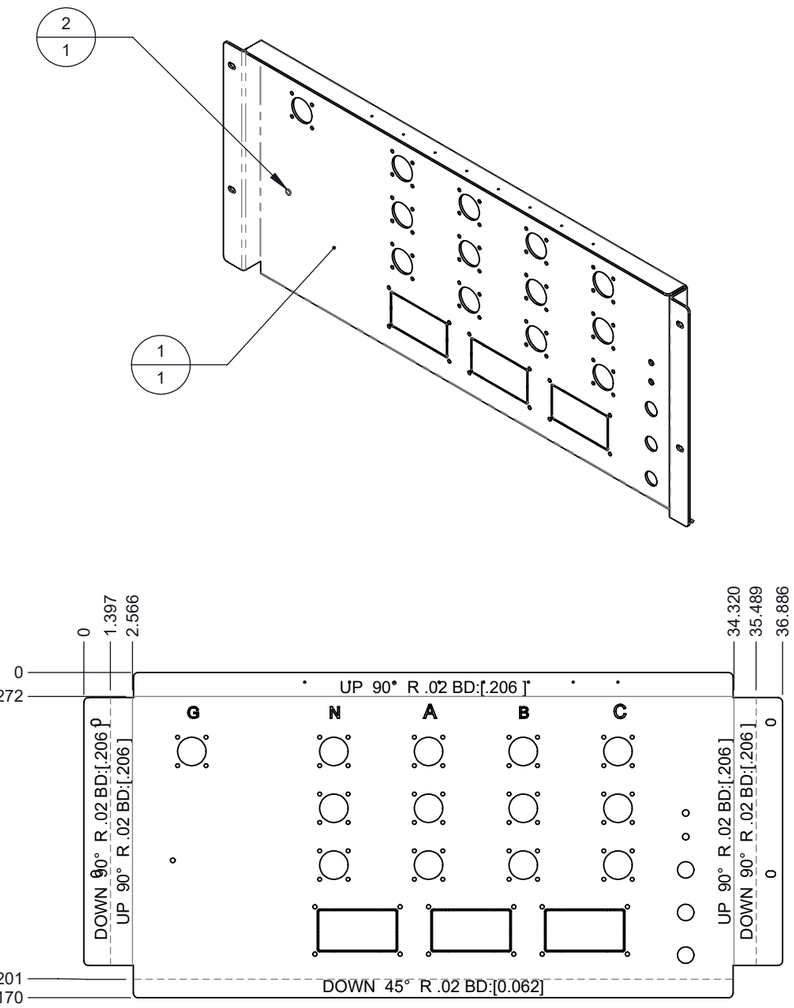

ANGLE	BEND DEDUCTION
45°	0.062"
90°	0.206"

BILL OF MATERIAL

ITEM NO.	PART NUMBER	DESCRIPTION	QTY.
1	200-80203	CAMPLATE, GEN/LB, 1200A, 723630, KIRK SLIDER	1
2	PEM FH-0420-14 ZI		1

MATERIAL: 0.125 5052-H32 — 7.15 lbs
FINISH: BARE

PROPRIETARY AND CONFIDENTIAL

THE INFORMATION CONTAINED IN THIS DRAWING IS THE SOLE PROPERTY OF FOXFAB POWER SOLUTIONS ANY REPRODUCTION IN PART OR AS A WHOLE WITHOUT THE WRITTEN PERMISSION OF FOXFAB POWER SOLUTIONS IS PROHIBITED.

DRAWN BY: AA — SAVED ON: 10/9/2025
BD: - — TOP DIE: 1mm — BOTTOM DIE: 16mm

UNLESS OTHERWISE SPECIFIED:
DIMENSIONS ARE IN INCHES
TOLERANCES:
X ± .25
X.X ± .1
X.XX ± .05
X.XXX ± .025
ANGULAR ± 1
INTERPRET DIM AND TOL. PER: **ASME Y14.5**

Foxfab Power Solutions
2579-188 ST.
SURREY, BC V3Z 2A1
(604) 460 - 9310
WWW.FOXFAB.COM

TITLE: CAMPLATE, GEN/LB, 1200A, 723630, KIRK SLIDER

THIRD ANGLE: — SIZE B — SCALE 1:8 — REV A
ITEM NO. — DWG. NO. 200-80203 — SHEET 1 OF 1

REVISION				
REV.	ZONE	DESCRIPTION	DATE	DRAWNBY
A		INITIAL RELEASE	2025-01-15	A. SINGH
A1	A6	ADDED DIMENSION	2025-07-07	A. SINGH

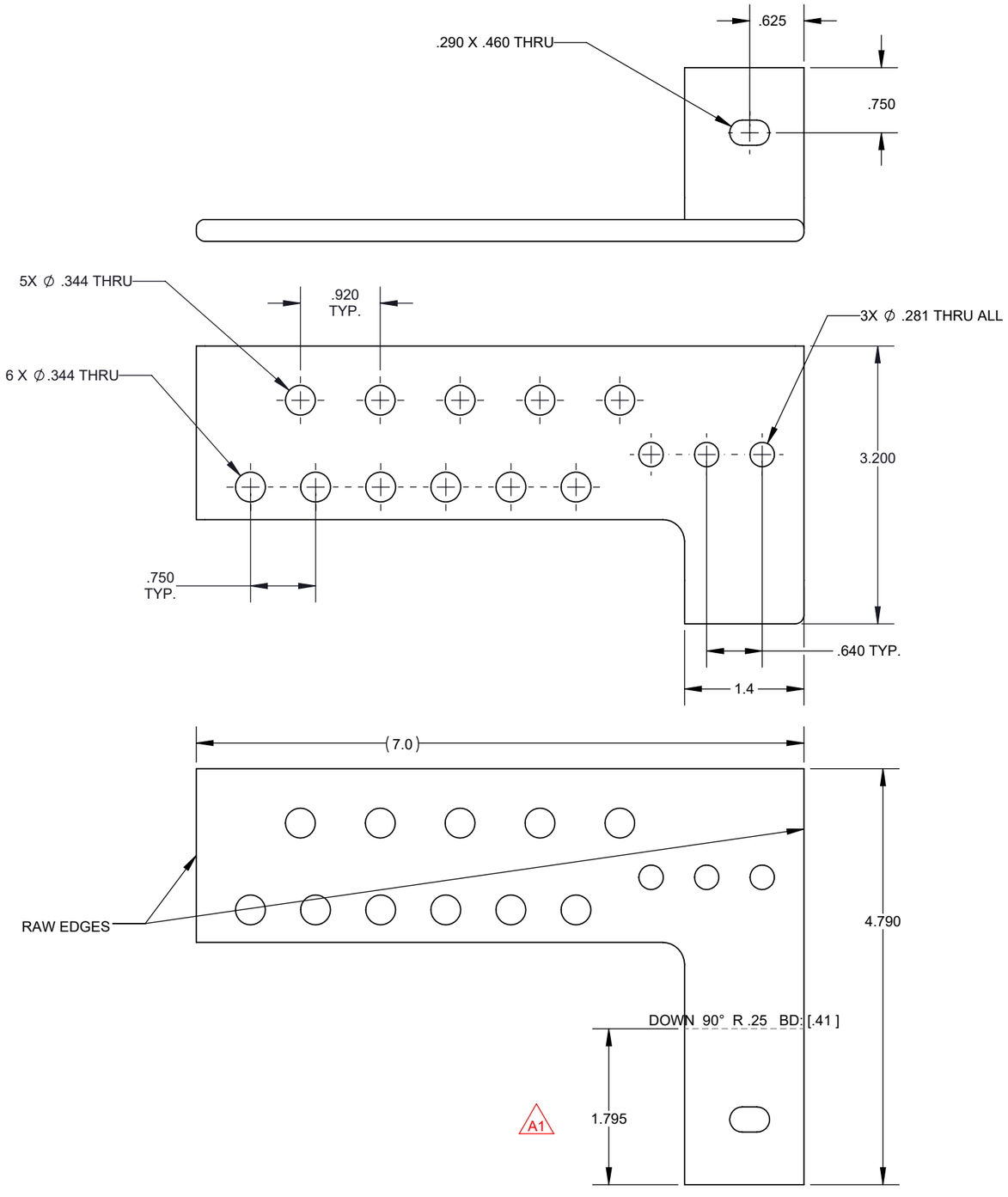

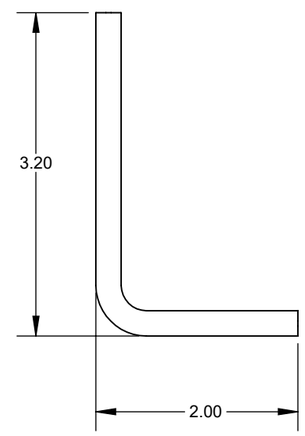

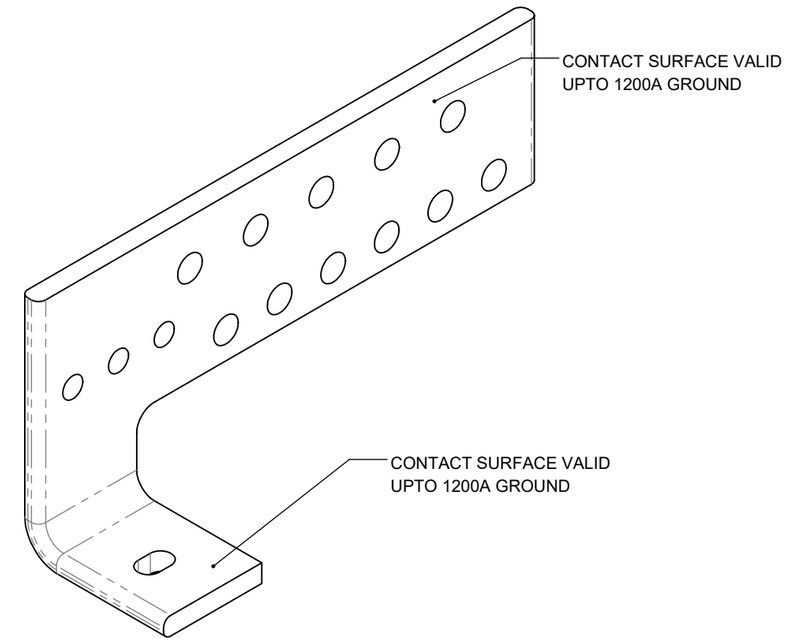

MATERIAL lbs
4.0"W X0.25 C1100 CU BAR

FINISH
PRE TIN PLATED

PROPRIETARY AND CONFIDENTIAL

THE INFORMATION CONTAINED IN THIS DRAWING IS THE SOLE PROPERTY OF FOXFAB POWER SOLUTIONS ANY REPRODUCTION IN PART OR AS A WHOLE WITHOUT THE WRITTEN PERMISSION OF FOXFAB POWER SOLUTIONS IS PROHIBITED.

DRAWN BY: AS
SAVED ON: 2025-07-07

BD	TOP DIE	BOTTOM DIE
0.41"	0.25"	32mm

UNLESS OTHERWISE SPECIFIED:
DIMENSIONS ARE IN INCHES
TOLERANCES:
X ± .25
X.X ± .1
X.XX ± .05
X.XXX ± .025
ANGULAR ± 1
INTERPRET DIM AND TOL. PER:
ASME Y14.5

Foxfab Power Solutions
2579-188 ST.
SURREY, BC V3Z 2A1
(604) 460 - 9310
WWW.FOXFAB.COM

TITLE:
BUS BAR, CAMPLATE, UPTO 1200A, GROUND COMMON

THIRD ANGLE: SIZE **B** SCALE 2:3 REV A1

ITEM NO. DWG. NO. 240-70476 SHEET 1 OF 1

REVISION				
REV.	ZONE	DESCRIPTION	DATE	DRAWNBY
A		INITIAL RELEASE	2025-04-24	A. SINGH
A1	B5	ADDED SIDE VIEW WITH DIMENSION	2025-07-07	A. SINGH

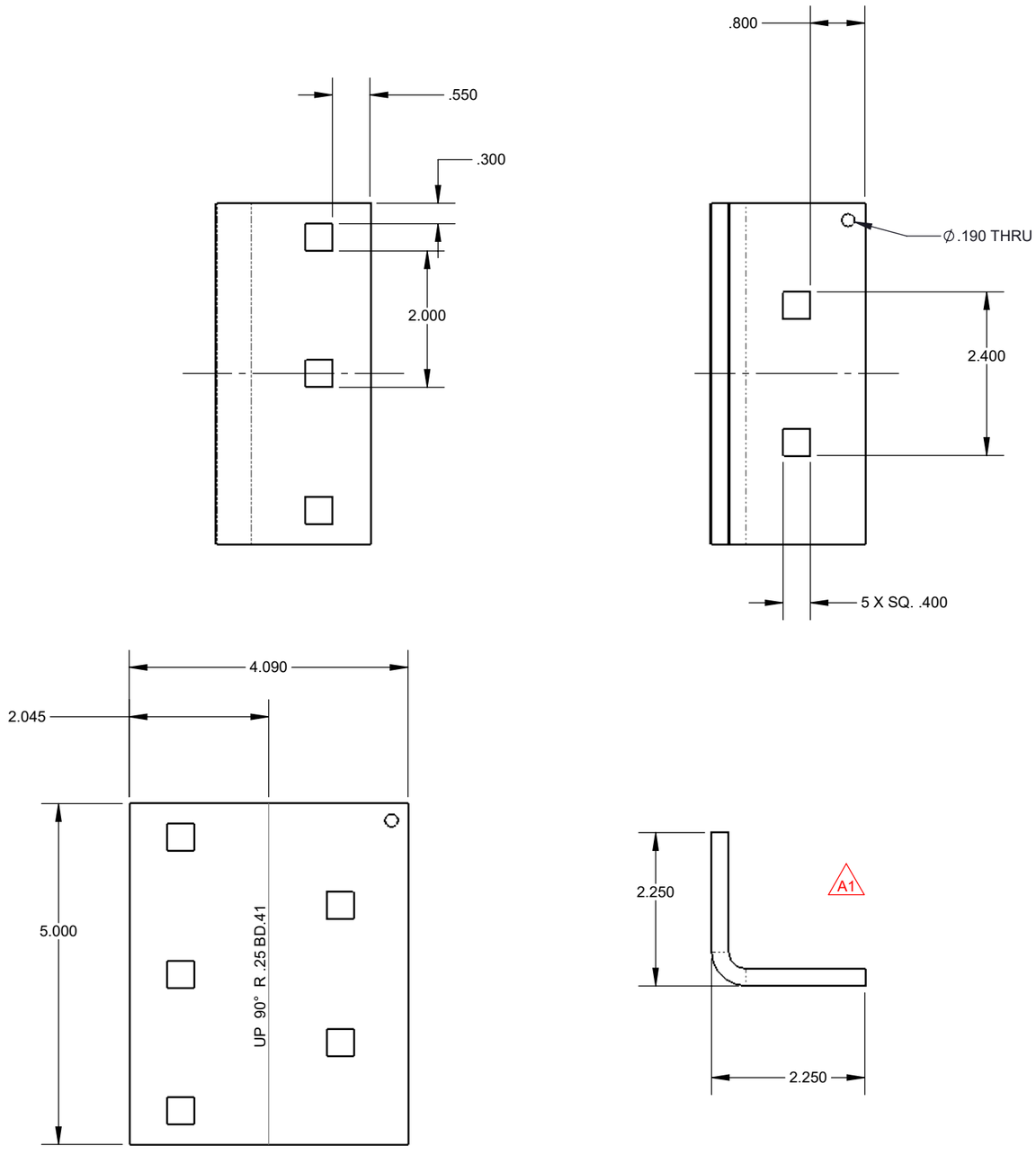

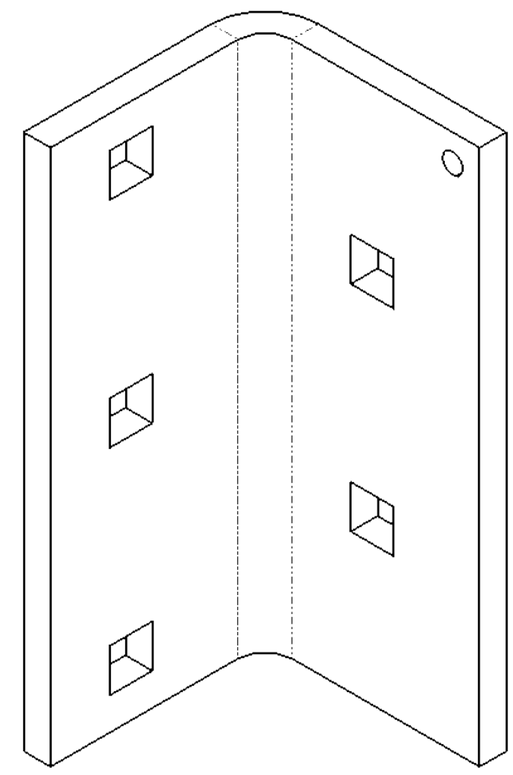

MATERIAL 1.58 lbs 0.25 Copper	DRAWN BY A. SINGH	SAVED ON 2025-07-07	Foxfab Power Solutions 2579-188 ST. SURREY, BC V3Z 2A1 (604) 460 - 9310 WWW.FOXFAB.COM
FINISH BARE	BD 0.410" / TOP DIE 0.25" / BOTTOM DIE 1.260"		TITLE: 1250A, CONNECTOR, CAMPLATE TO PH BUS
PROPRIETARY AND CONFIDENTIAL THE INFORMATION CONTAINED IN THIS DRAWING IS THE SOLE PROPERTY OF FOXFAB POWER SOLUTIONS ANY REPRODUCTION IN PART OR AS A WHOLE WITHOUT THE WRITTEN PERMISSION OF FOXFAB POWER SOLUTIONS IS PROHIBITED.	UNLESS OTHERWISE SPECIFIED: DIMENSIONS ARE IN INCHES TOLERANCES: X ± .25 X.X ± .1 X.XX ± .05 X.XXX ± .025 ANGULAR ± 1 INTERPRET DIM AND TOL. PER: **ASME Y14.5**		THIRD ANGLE: SIZE **B** SCALE 1:2 REV A1 ITEM NO. DWG. NO. 240-70683 SHEET 1 OF 1

REVISION				
REV.	ZONE	DESCRIPTION	DATE	DRAWNBY
A		INITIAL RELEASE	2025-04-24	A. SINGH

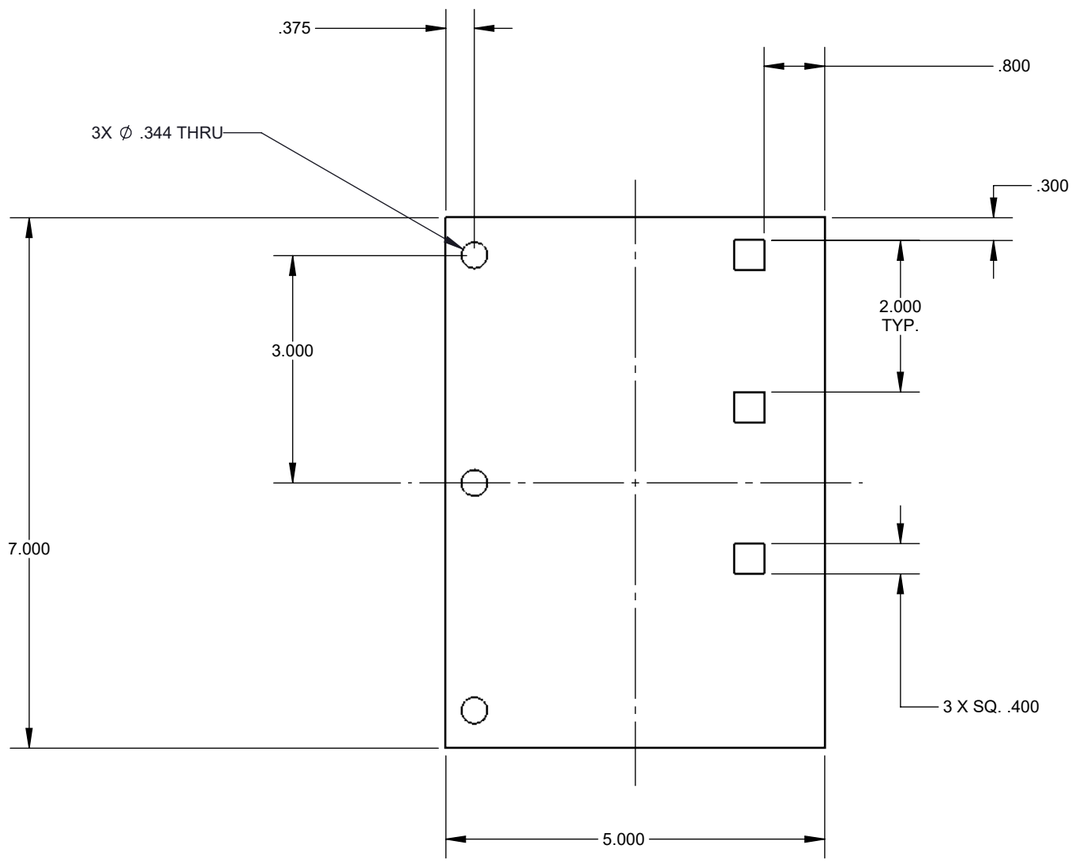

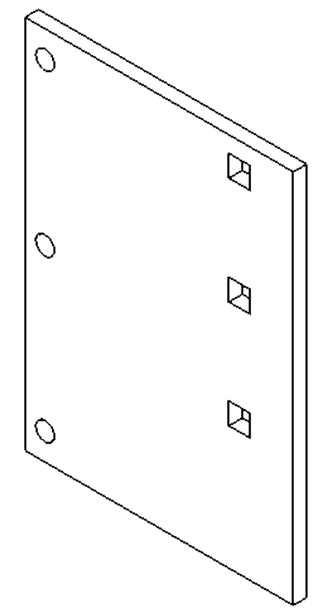

MATERIAL 2.75 lbs 0.25 Copper	DRAWN BY A. SINGH	SAVED ON 2025-04-24	Foxfab Power Solutions 2579-188 ST. SURREY, BC V3Z 2A1 (604) 460 - 9310 WWW.FOXFAB.COM
FINISH BARE	BD - / TOP DIE 0.024" / BOTTOM DIE 16mm		TITLE: NEUTRAL BUS, 1250A
PROPRIETARY AND CONFIDENTIAL THE INFORMATION CONTAINED IN THIS DRAWING IS THE SOLE PROPERTY OF FOXFAB POWER SOLUTIONS. ANY REPRODUCTION IN PART OR AS A WHOLE WITHOUT THE WRITTEN PERMISSION OF FOXFAB POWER SOLUTIONS IS PROHIBITED.	UNLESS OTHERWISE SPECIFIED: DIMENSIONS ARE IN INCHES TOLERANCES: X ± .25 X.X ± .1 X.XX ± .05 X.XXX ± .025 ANGULAR ± 1 INTERPRET DIM AND TOL. PER: **ASME Y14.5**		THIRD ANGLE: / SIZE **B** / SCALE 1:2 / REV A
			ITEM NO. / DWG. NO. 240-70685 / SHEET 1 OF 1

REVISION				
REV.	ZONE	DESCRIPTION	DATE	DRAWNBY
A		INITIAL RELEASE	10/9/2025	A. AZAR

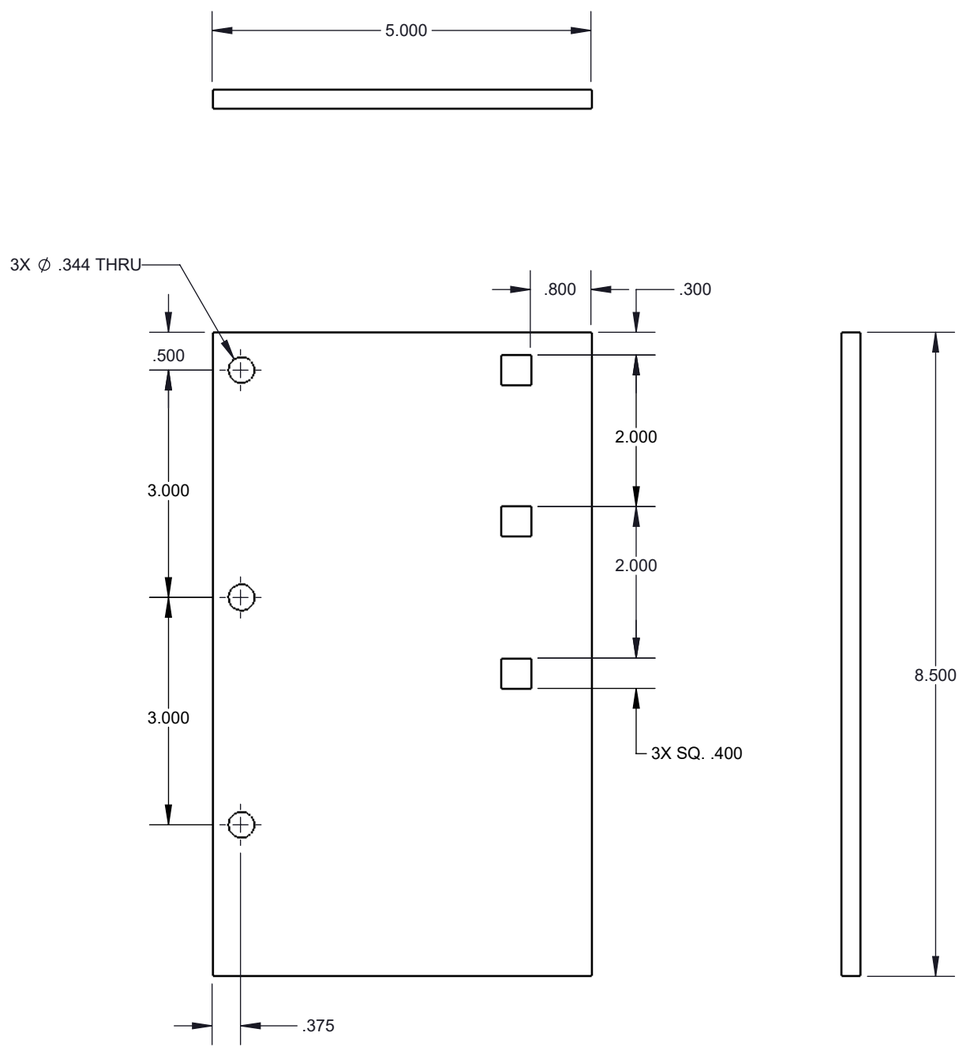

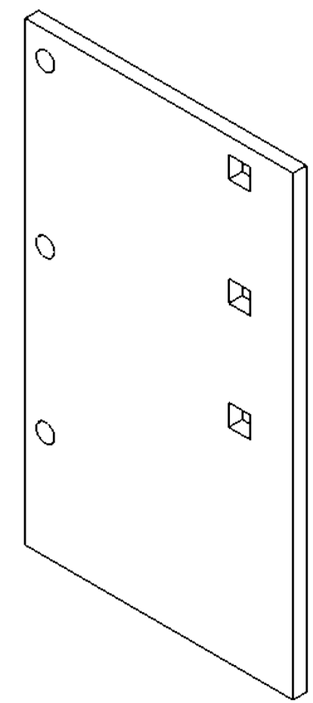

MATERIAL 3.36 lbs 0.25 Copper	DRAWN BY AA	SAVED ON 10/9/2025	Foxfab Power Solutions 2579-188 ST. SURREY, BC V3Z 2A1 (604) 460 - 9310 WWW.FOXFAB.COM
FINISH BARE	BD -	TOP DIE -	BOTTOM DIE -
PROPRIETARY AND CONFIDENTIAL THE INFORMATION CONTAINED IN THIS DRAWING IS THE SOLE PROPERTY OF FOXFAB POWER SOLUTIONS ANY REPRODUCTION IN PART OR AS A WHOLE WITHOUT THE WRITTEN PERMISSION OF FOXFAB POWER SOLUTIONS IS PROHIBITED.	UNLESS OTHERWISE SPECIFIED: DIMENSIONS ARE IN INCHES TOLERANCES: X ± .25 X.X ± .1 X.XX ± .05 X.XXX ± .025 ANGULAR ±1 INTERPRET DIM AND TOL. PER: **ASME Y14.5**	TITLE: CAMPLATE, 1250A, PH BUS COMMON	
		THIRD ANGLE: SIZE **B** SCALE 1:4	REV A
		ITEM NO. DWG. NO. 240-80708	SHEET 1 OF 1

REVISION				
REV.	ZONE	DESCRIPTION	DATE	DRAWNBY
A		INITIAL RELEASE	10/9/2025	A. AZAR

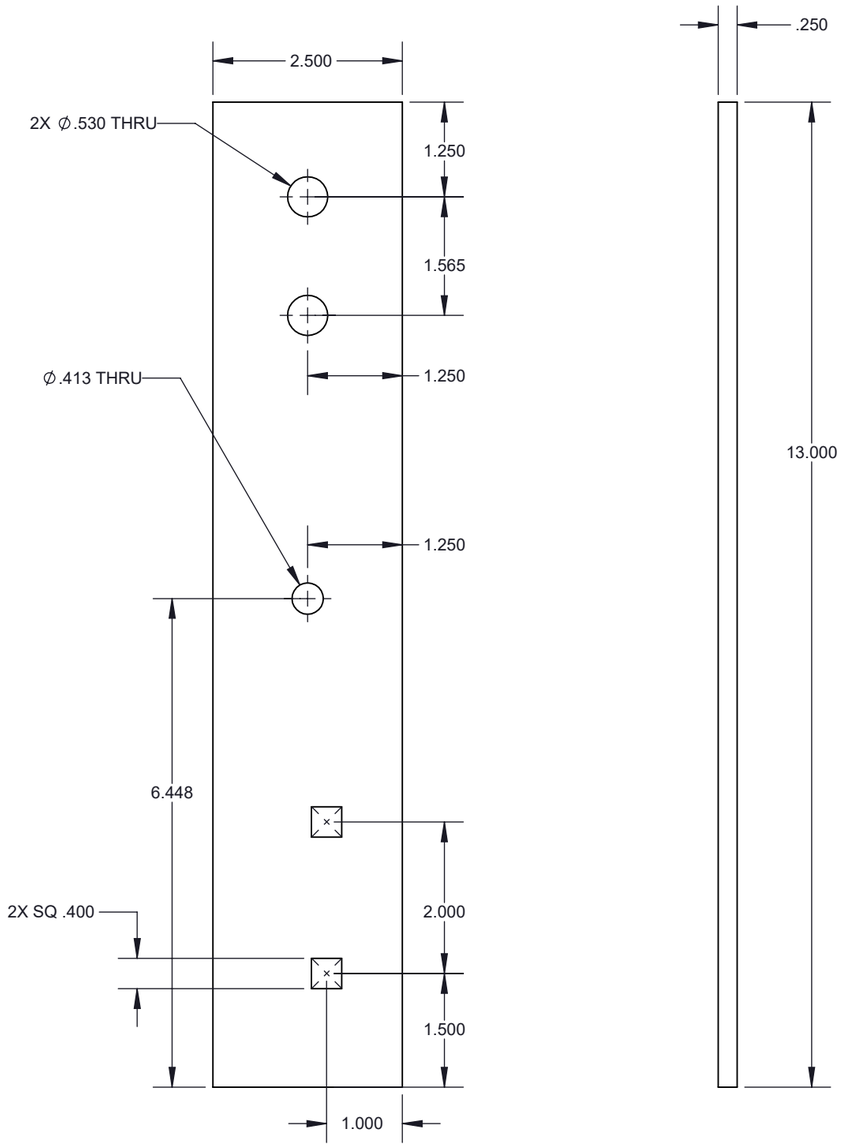

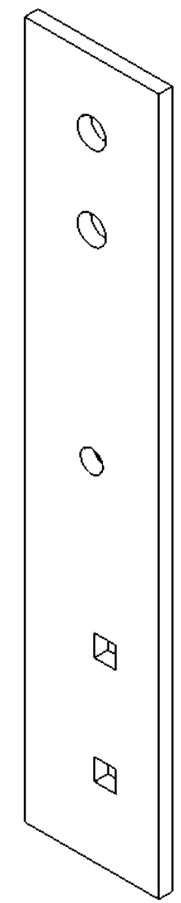

MATERIAL 2.54 lbs 0.25 Copper	DRAWN BY AA	SAVED ON 10/10/2025	Foxfab Power Solutions 2579-188 ST. SURREY, BC V3Z 2A1 (604) 460 - 9310 WWW.FOXFAB.COM
FINISH BARE	BD - / TOP DIE - / BOTTOM DIE -		TITLE: CU #2 OF 2, 625A, 8C - 600 MCM
PROPRIETARY AND CONFIDENTIAL THE INFORMATION CONTAINED IN THIS DRAWING IS THE SOLE PROPERTY OF FOXFAB POWER SOLUTIONS ANY REPRODUCTION IN PART OR AS A WHOLE WITHOUT THE WRITTEN PERMISSION OF FOXFAB POWER SOLUTIONS IS PROHIBITED.	UNLESS OTHERWISE SPECIFIED: DIMENSIONS ARE IN INCHES TOLERANCES: X ± .25 X.X ± .1 X.XX ± .05 X.XXX ± .025 ANGULAR ± 1 INTERPRET DIM AND TOL. PER: **ASME Y14.5**	THIRD ANGLE:	SIZE **B** / SCALE 1:4 / REV A
		ITEM NO. / DWG. NO. 240-80709	SHEET 1 OF 1

REVISION				
REV.	ZONE	DESCRIPTION	DATE	DRAWNBY
A		INITIAL RELEASE	9/25/2025	A. AZAR

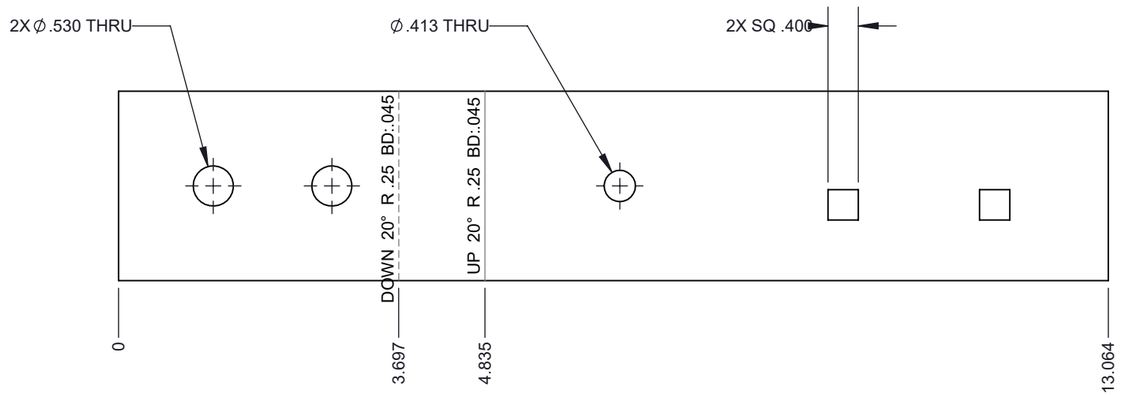

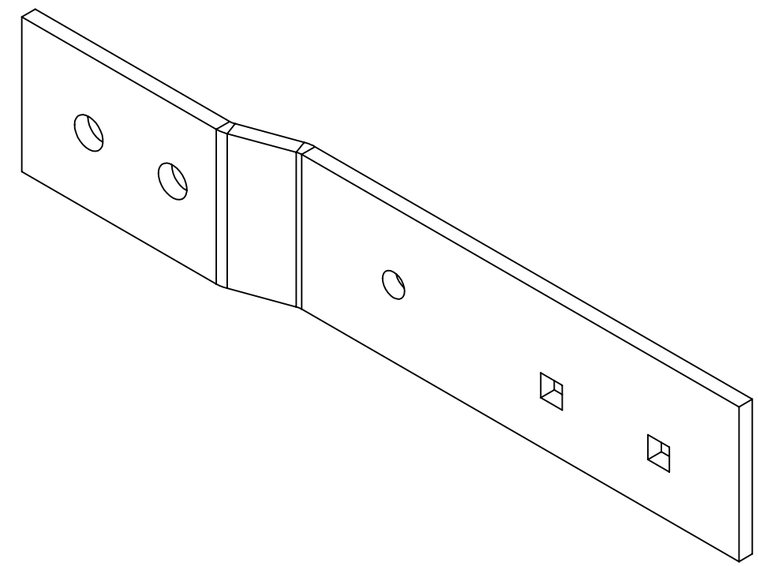

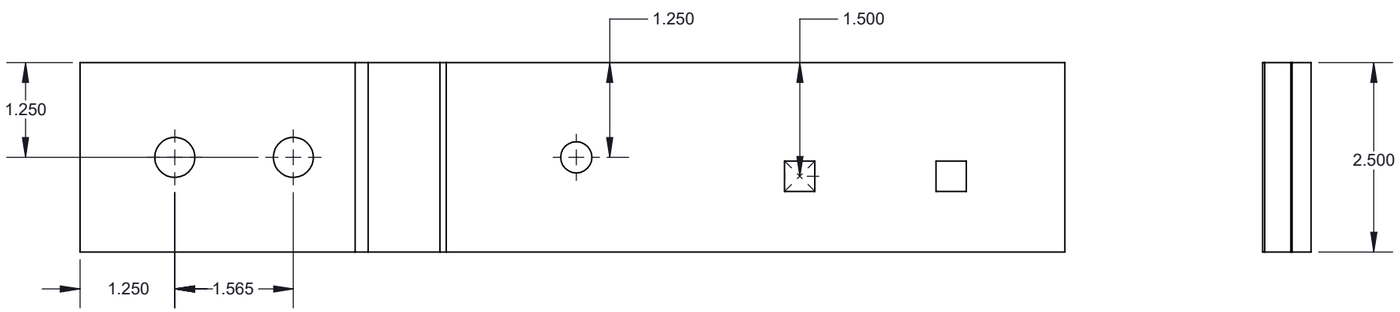

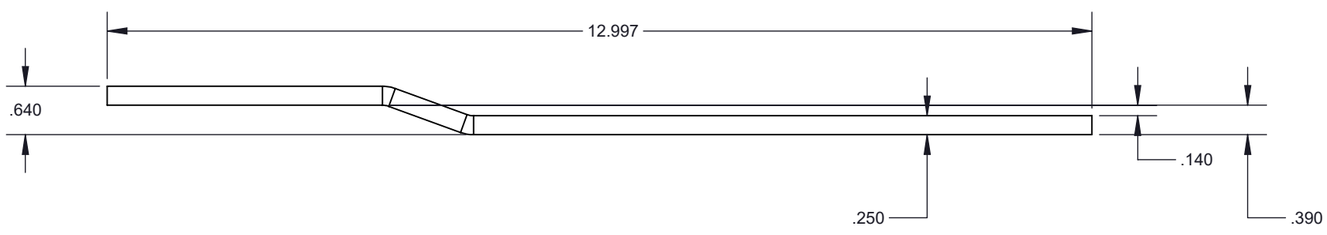

ANGLE	BEND DEDUCTION
20	0.0452"
90	0410"

MATERIAL 2.55 lbs
0.25 Copper

FINISH
BARE

PROPRIETARY AND CONFIDENTIAL

THE INFORMATION CONTAINED IN THIS DRAWING IS THE SOLE PROPERTY OF FOXFAB POWER SOLUTIONS ANY REPRODUCTION IN PART OR AS A WHOLE WITHOUT THE WRITTEN PERMISSION OF FOXFAB POWER SOLUTIONS IS PROHIBITED.

DRAWN BY: AA
SAVED ON: 10/10/2025

BD	TOP DIE	BOTTOM DIE
-	0.250"	1.260"

UNLESS OTHERWISE SPECIFIED:
DIMENSIONS ARE IN INCHES
TOLERANCES:
X ± .25
X.X ± .1
X.XX ± .05
X.XXX ± .025
ANGULAR ± 1
INTERPRET DIM AND TOL. PER:
ASME Y14.5

Foxfab Power Solutions
2579-188 ST.
SURREY, BC V3Z 2A1
(604) 460 - 9310
WWW.FOXFAB.COM

TITLE:
BUS, LUG & FUSE MOUNT, 1600A, 3.5" X 14"

THIRD ANGLE: SIZE **B** SCALE 1:2 REV A

ITEM NO. DWG. NO. 240-80710 SHEET 1 OF 1

REVISION				
REV.	ZONE	DESCRIPTION	DATE	DRAWNBY
A		INITIAL RELEASE	9/25/2025	A. AZAR

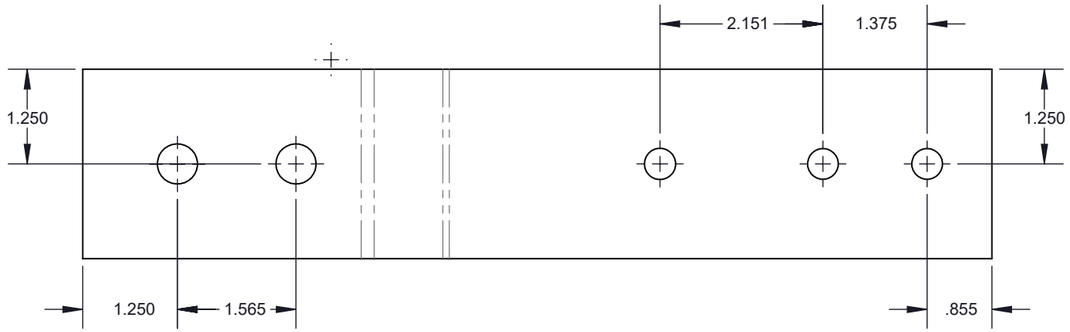

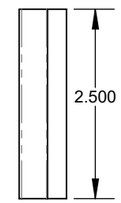

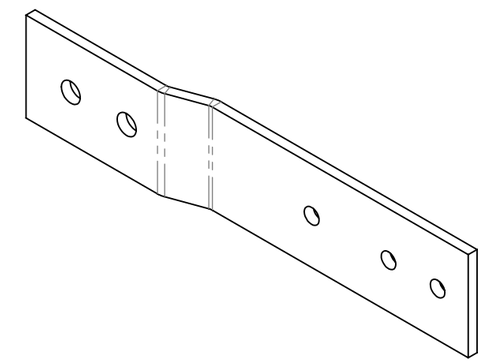

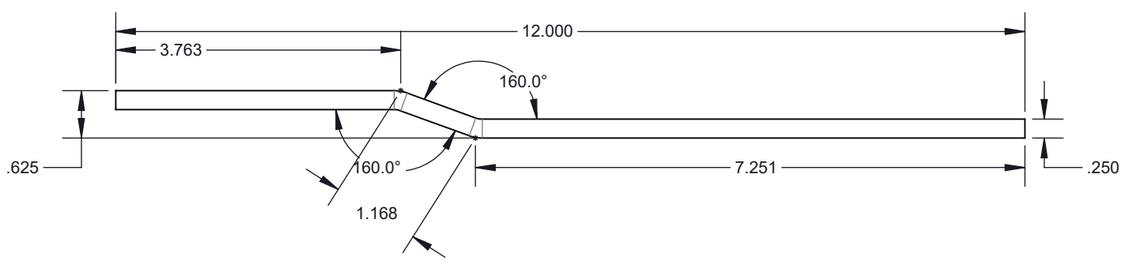

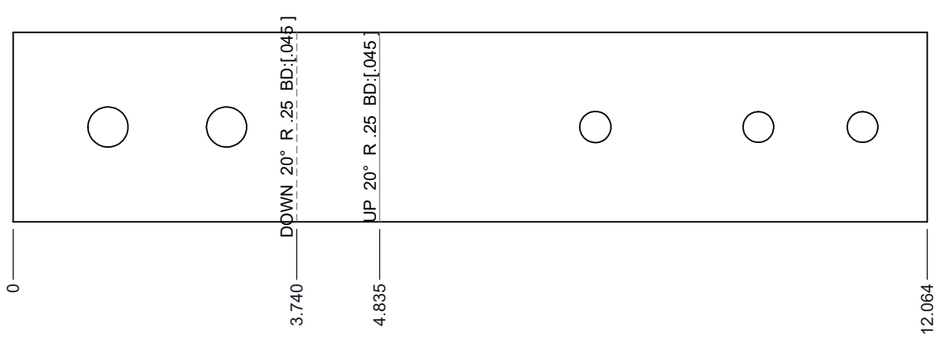

ANGLE	BEND DEDUCTION
20	0.0452"
90	0410"

MATERIAL 2.36 lbs
0.25 Copper

FINISH
BARE

PROPRIETARY AND CONFIDENTIAL

THE INFORMATION CONTAINED IN THIS DRAWING IS THE SOLE PROPERTY OF FOXFAB POWER SOLUTIONS ANY REPRODUCTION IN PART OR AS A WHOLE WITHOUT THE WRITTEN PERMISSION OF FOXFAB POWER SOLUTIONS IS PROHIBITED.

DRAWN BY: AA | SAVED ON: 10/9/2025

BD	TOP DIE	BOTTOM DIE
-	0.250"	1.260"

UNLESS OTHERWISE SPECIFIED:
DIMENSIONS ARE IN INCHES
TOLERANCES:
X ± .25
X.X ± .1
X.XX ± .05
X.XXX ± .025
ANGULAR ± 1
INTERPRET DIM AND TOL. PER:
ASME Y14.5

Foxfab Power Solutions
2579-188 ST.
SURREY, BC V3Z 2A1
(604) 460 - 9310
WWW.FOXFAB.COM

TITLE:
BUS, LUG & FUSE MOUNT

THIRD ANGLE: | SIZE **B** | SCALE 1:2 | REV A

ITEM NO. | DWG. NO. 240-80711 | SHEET 1 OF 1

REVISION				
REV.	ZONE	DESCRIPTION	DATE	DRAWNBY
A		INITIAL RELEASE	10/9/2025	A. AZAR

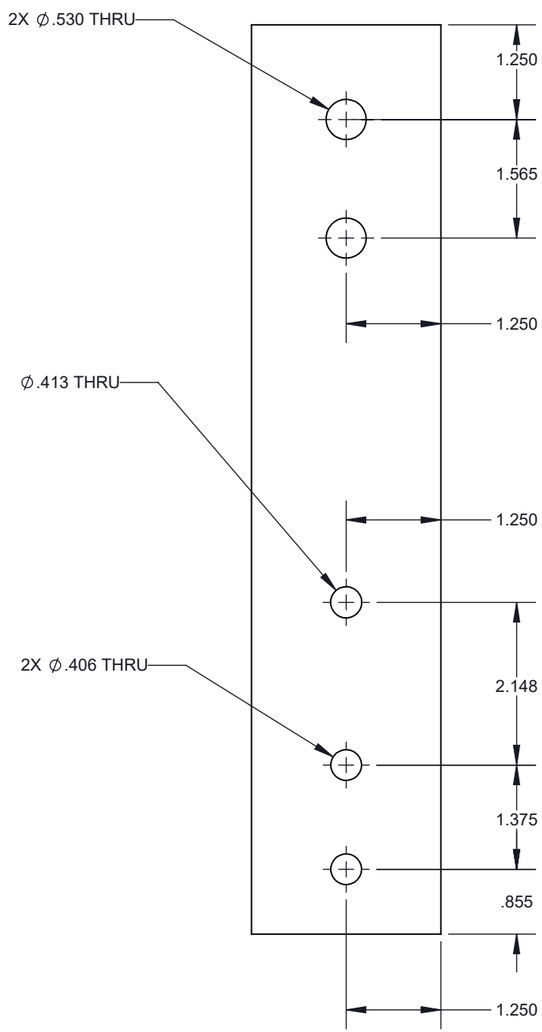

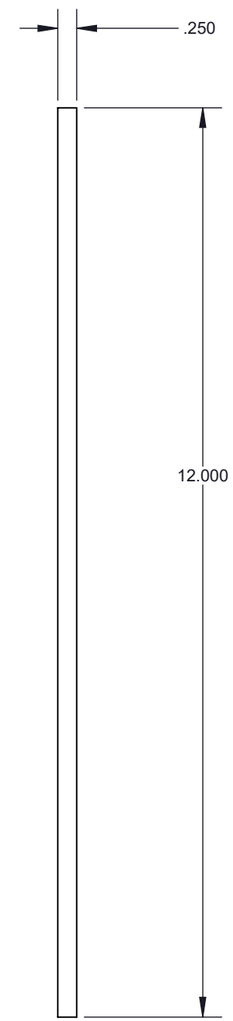

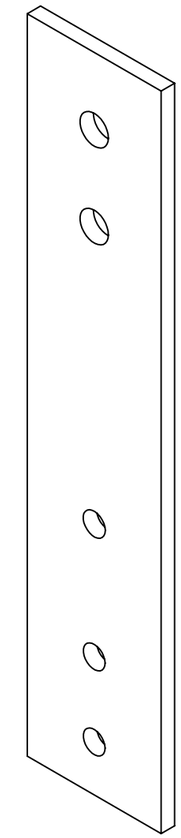

MATERIAL 2.34 lbs 0.25 Copper	DRAWN BY AA	SAVED ON 10/9/2025	Foxfab Power Solutions 2579-188 ST. SURREY, BC V3Z 2A1 (604) 460 - 9310 WWW.FOXFAB.COM
FINISH BARE	BD - / TOP DIE - / BOTTOM DIE -		TITLE: CU #2 OF 2, 625A, 8C - 600 MCM
PROPRIETARY AND CONFIDENTIAL THE INFORMATION CONTAINED IN THIS DRAWING IS THE SOLE PROPERTY OF FOXFAB POWER SOLUTIONS ANY REPRODUCTION IN PART OR AS A WHOLE WITHOUT THE WRITTEN PERMISSION OF FOXFAB POWER SOLUTIONS IS PROHIBITED.	UNLESS OTHERWISE SPECIFIED: DIMENSIONS ARE IN INCHES TOLERANCES: X ± .25 X.X ± .1 X.XX ± .05 X.XXX ± .025 ANGULAR ± 1 INTERPRET DIM AND TOL. PER: **ASME Y14.5**		THIRD ANGLE: / SIZE **B** / SCALE 1:4 / REV A
			ITEM NO. / DWG. NO. 240-80712 / SHEET 1 OF 1

REVISION				
REV.	ZONE	DESCRIPTION	DATE	DRAWNBY
A		INITIAL RELEASE	10/9/2025	A. AZAR

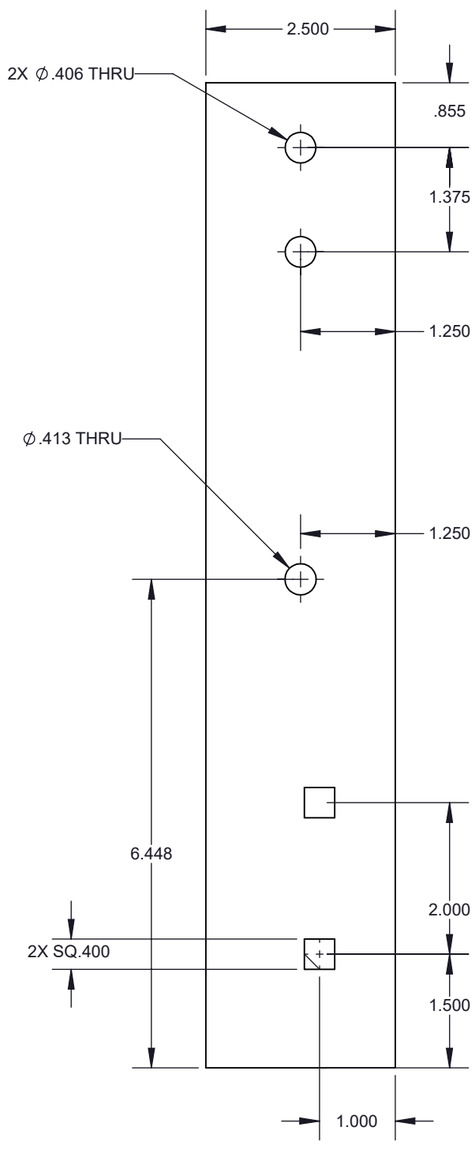

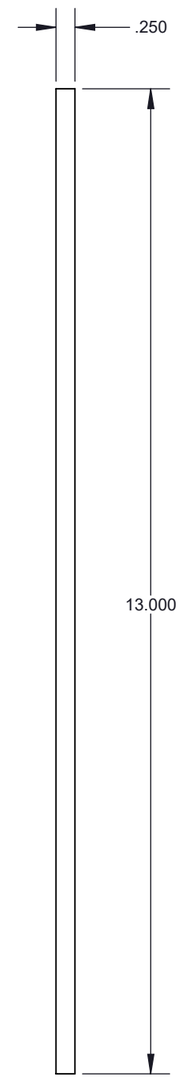

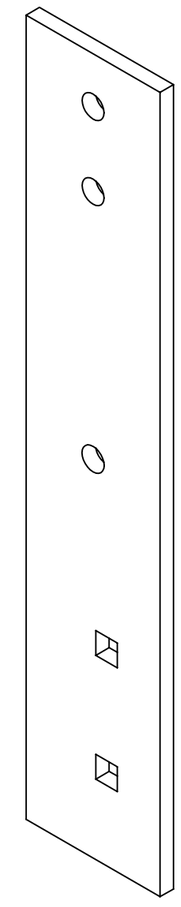

MATERIAL 2.56 lbs
0.25" COPPER0.25 Copper

FINISH
PC: SURFACE TEXTURE ANSI CODE COLOUR

PROPRIETARY AND CONFIDENTIAL

THE INFORMATION CONTAINED IN THIS DRAWING IS THE SOLE PROPERTY OF FOXFAB POWER SOLUTIONS ANY REPRODUCTION IN PART OR AS A WHOLE WITHOUT THE WRITTEN PERMISSION OF FOXFAB POWER SOLUTIONS IS PROHIBITED.

DRAWN BY: AA
SAVED ON: 10/9/2025
BD: -
TOP DIE: -
BOTTOM DIE: -

UNLESS OTHERWISE SPECIFIED:
DIMENSIONS ARE IN INCHES
TOLERANCES:
X ± .3
X.X ± .15
X.XX ± .06
X.XXX ± .03
ANGULAR ± 1
INTERPRET DIM AND TOL. PER:
ASME Y14.5

Foxfab Power Solutions
2579-188 ST.
SURREY, BC V3Z 2A1
(604) 460 - 9310
WWW.FOXFAB.COM

TITLE:
CU, 625A, 8C - 600 MCM

THIRD ANGLE: SIZE **B** SCALE 1:4 REV A

ITEM NO. DWG. NO. 240-80713 SHEET 1 OF 1

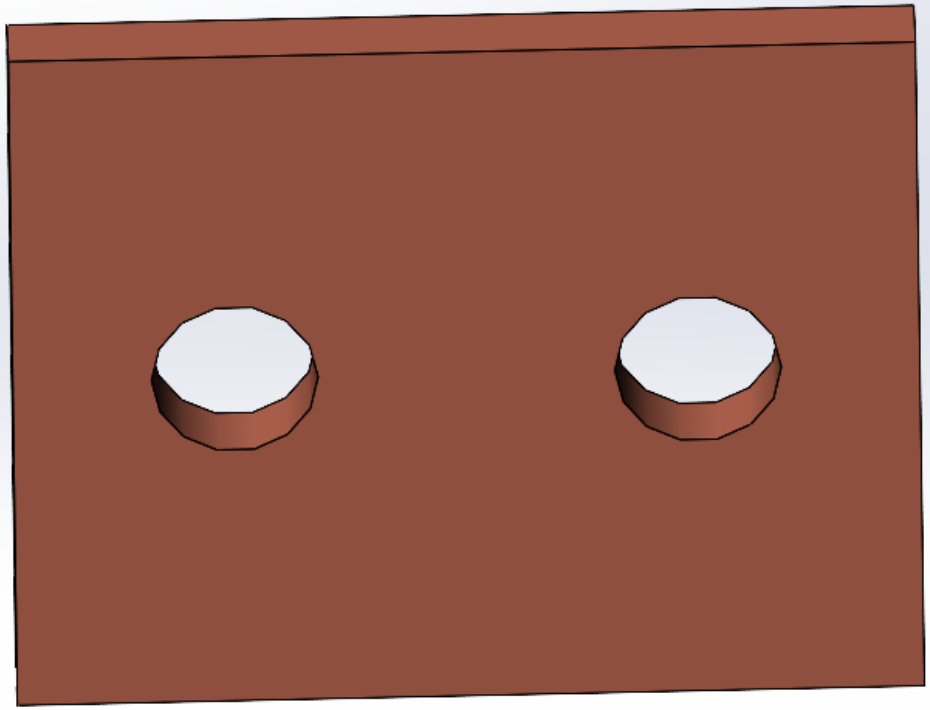

REVISION				
REV.	ZONE	DESCRIPTION	DATE	DRAWNBY
A		INITIAL RELEASE	2/21/2019	M. L
B	B7	NOTCHES ADDED	3/8/2022	P.TA

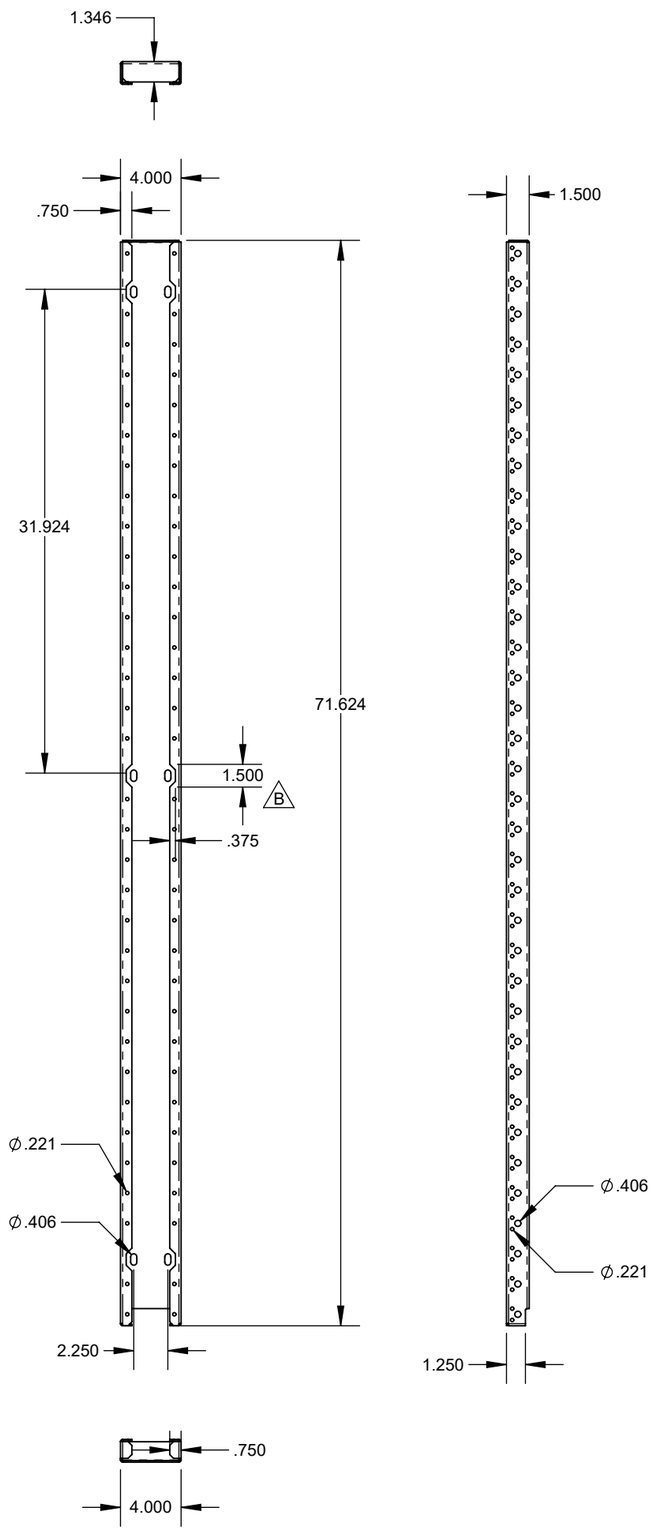

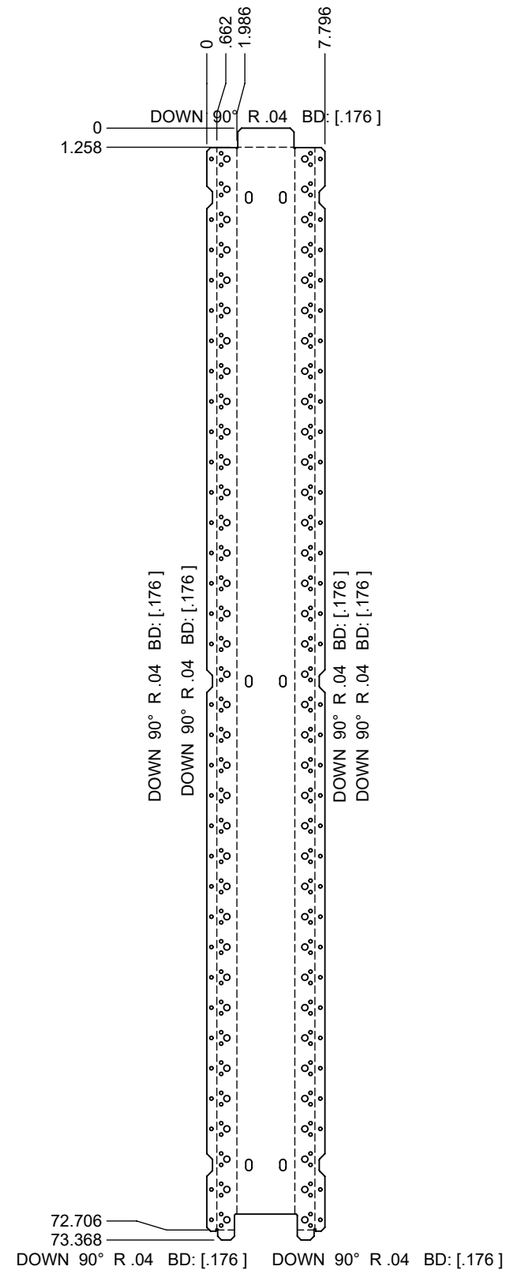

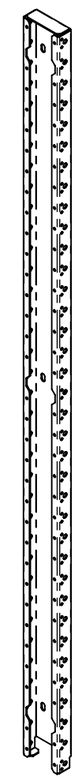

REQUIRED **2** PCS PER ASSEMBLY

MATERIAL 16.16 lbs 0.104 GALVANIZED CRS	DRAWN BY P.TA	SAVED ON 3/8/2022	Foxfab Power Solutions 2579-188 ST. SURREY, BC V3Z 2A1 (604) 460 - 9310 WWW.FOXFAB.COM
FINISH BARE	BD 0.206" / TOP DIE 1mm / BOTTOM DIE 16mm		TITLE: FRAME, VERTICAL BEAM,71-5/8 X 4
PROPRIETARY AND CONFIDENTIAL THE INFORMATION CONTAINED IN THIS DRAWING IS THE SOLE PROPERTY OF FOXFAB POWER SOLUTIONS ANY REPRODUCTION IN PART OR AS A WHOLE WITHOUT THE WRITTEN PERMISSION OF FOXFAB POWER SOLUTIONS IS PROHIBITED.	UNLESS OTHERWISE SPECIFIED: DIMENSIONS ARE IN INCHES TOLERANCES: X ± .25 X.X ± .1 X.XX ± .05 X.XXX ± .025 ANGULAR ±1 INTERPRET DIM AND TOL. PER: **ASME Y14.5**		THIRD ANGLE: SIZE **B** SCALE 1:10 REV B ITEM NO. DWG. NO. 250-20120 rB SHEET 1 OF 1

REVISION				
REV.	ZONE	DESCRIPTION	DATE	DRAWNBY
A		INITIAL RELEASE	2025-04-24	A. SINGH

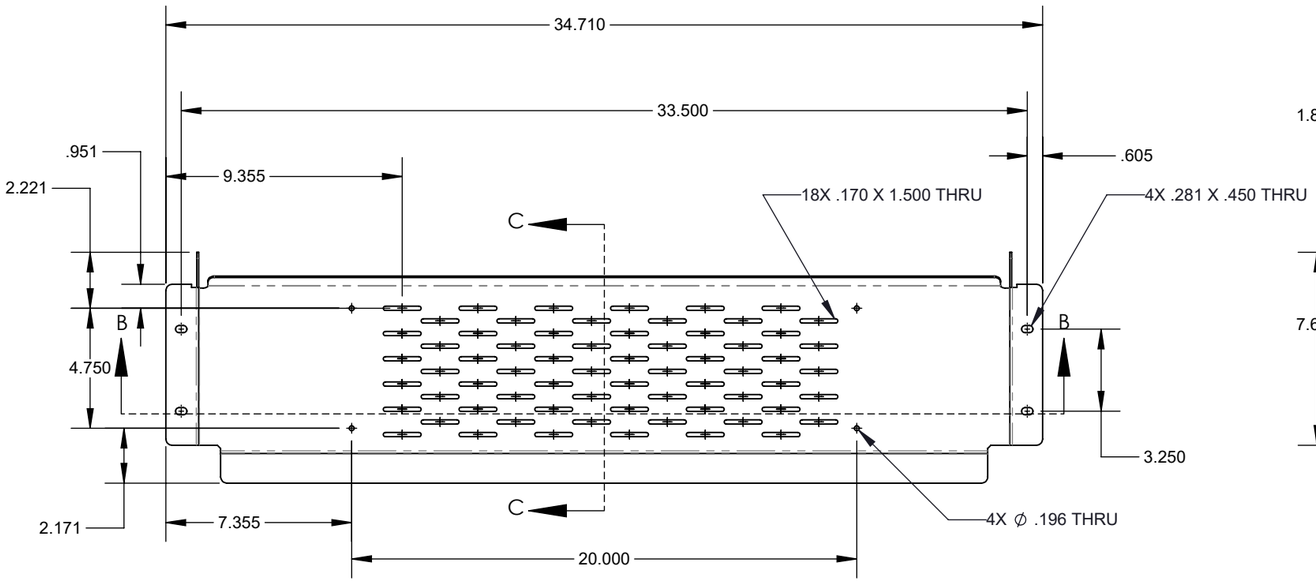

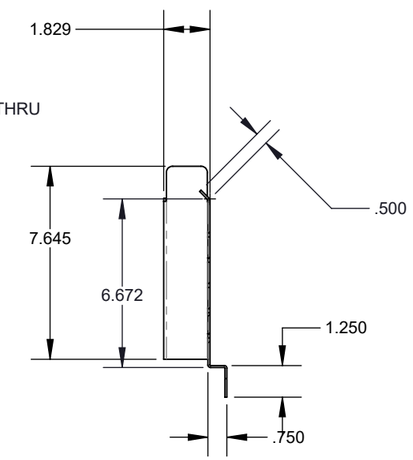

SECTION C-C
SCALE 1 : 6

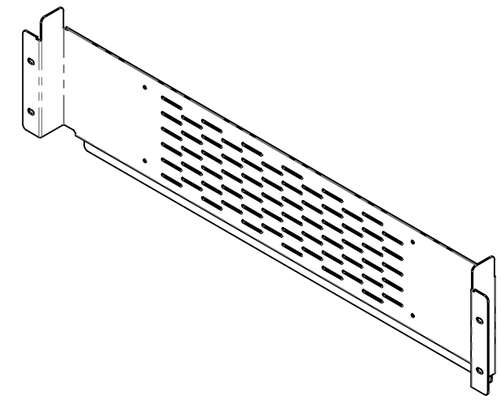

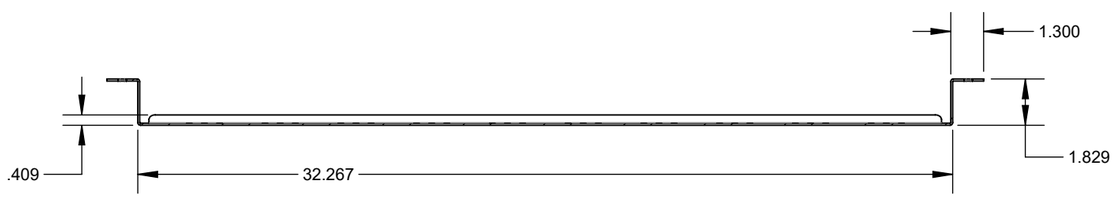

SECTION B-B
SCALE 1 : 6

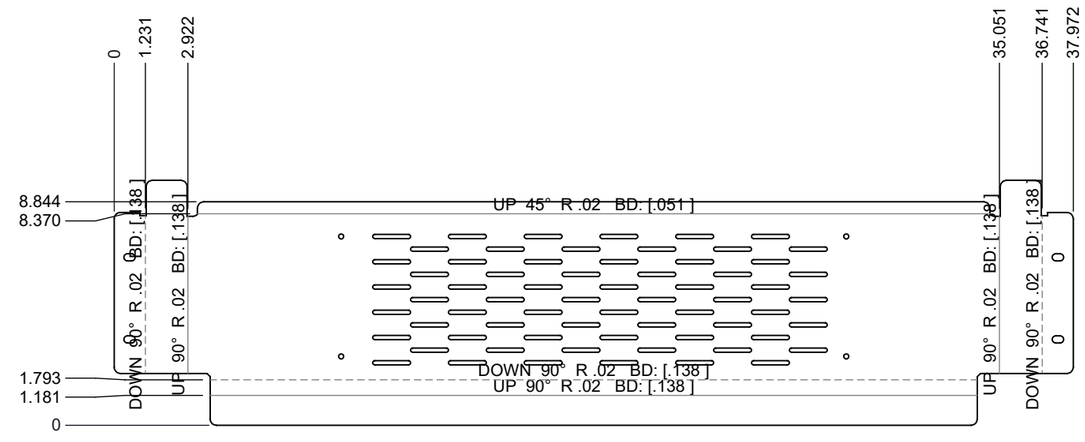

TOP: 1mm
BOTTOM: 14mm
OBD: 0.138" AT 90°
0.051" AT 135°

MATERIAL 6.87 lbs 0.0785 GALVANIZED CRS	DRAWN BY A. SINGH	SAVED ON 2025-04-24	Foxfab Power Solutions 2579-188 ST. SURREY, BC V3Z 2A1 (604) 460 - 9310 WWW.FOXFAB.COM
FINISH BARE	BD 0.138" / TOP DIE 1mm / BOTTOM DIE 14mm		TITLE: DEADFRONT, BOTTOM, 72x36x30
PROPRIETARY AND CONFIDENTIAL THE INFORMATION CONTAINED IN THIS DRAWING IS THE SOLE PROPERTY OF FOXFAB POWER SOLUTIONS ANY REPRODUCTION IN PART OR AS A WHOLE WITHOUT THE WRITTEN PERMISSION OF FOXFAB POWER SOLUTIONS IS PROHIBITED.	UNLESS OTHERWISE SPECIFIED: DIMENSIONS ARE IN INCHES TOLERANCES: X ± .25 X.X ± .1 X.XX ± .05 X.XXX ± .025 ANGULAR ± 1 INTERPRET DIM AND TOL. PER: **ASME Y14.5**		THIRD ANGLE: SIZE **B** SCALE 1:8 REV A ITEM NO. DWG. NO. 250-70544 SHEET 1 OF 1

REVISION				
REV.	ZONE	DESCRIPTION	DATE	DRAWNBY
A		INITIAL RELEASE	10/9/2025	A. AZAR

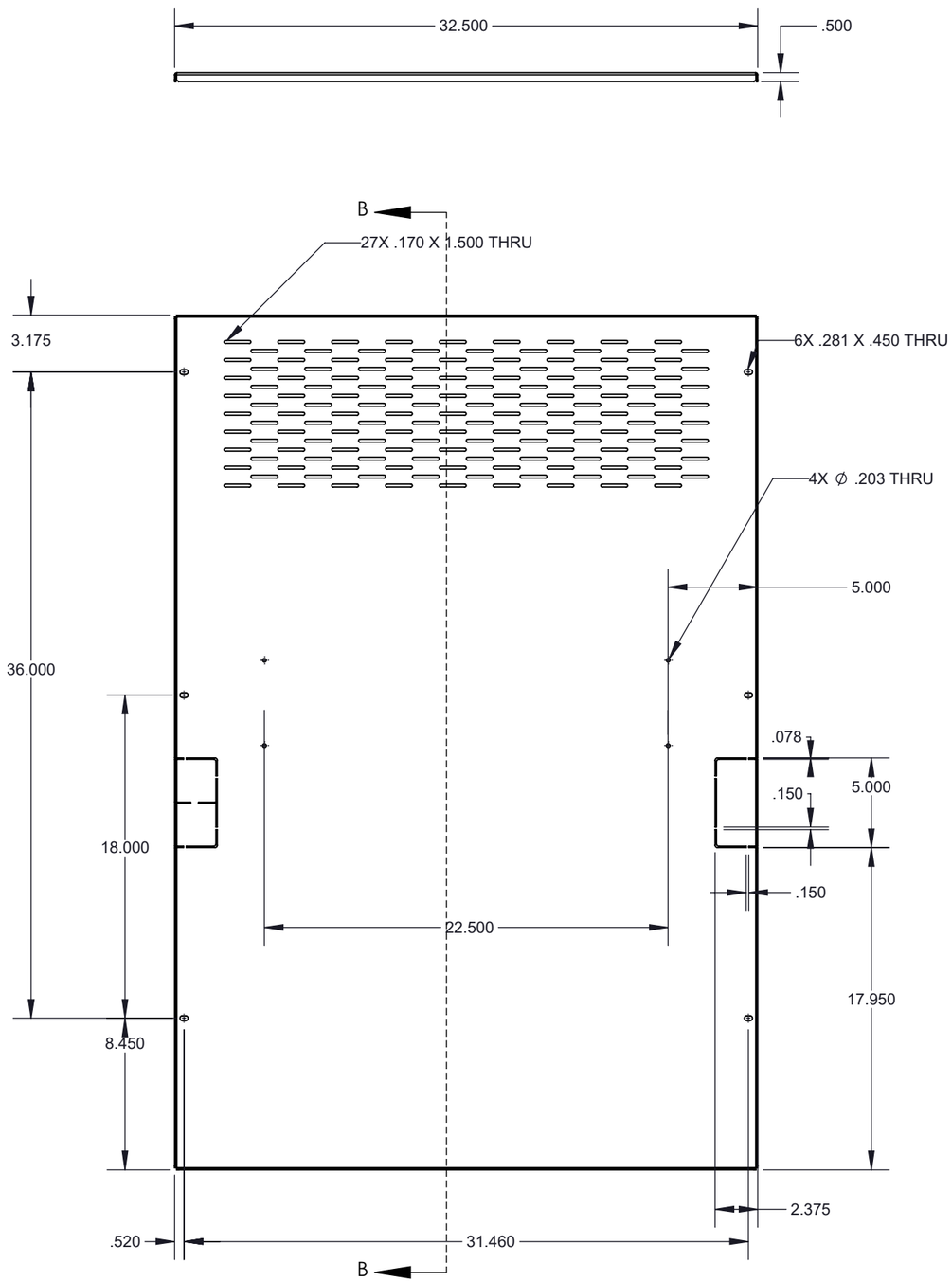

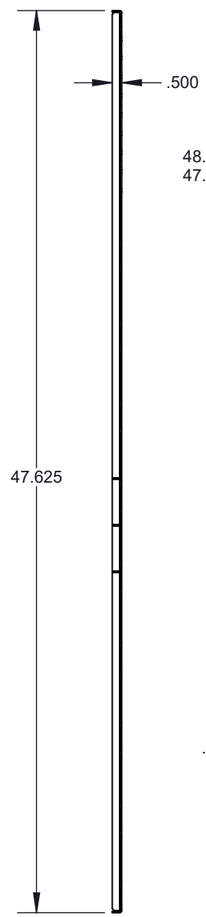

SECTION B-B

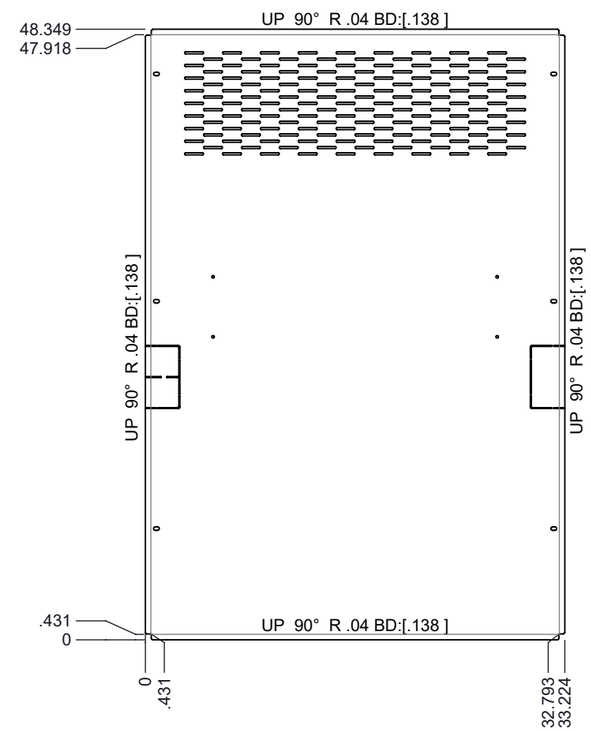

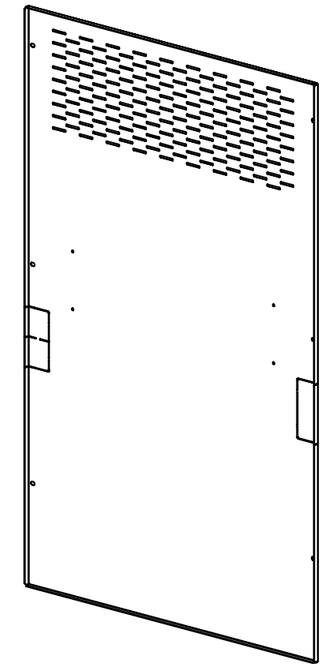

MATERIAL 34.97 lbs 0.0784 GALVANIZED CRS	DRAWN BY AA	SAVED ON 10/10/2025	Foxfab Power Solutions 2579-188 ST. SURREY, BC V3Z 2A1 (604) 460 - 9310 WWW.FOXFAB.COM
FINISH BARE	BD 0.138" / TOP DIE 1mm / BOTTOM DIE 16mm		TITLE: DEADFRONT, TOP, 72x36x30
PROPRIETARY AND CONFIDENTIAL THE INFORMATION CONTAINED IN THIS DRAWING IS THE SOLE PROPERTY OF FOXFAB POWER SOLUTIONS ANY REPRODUCTION IN PART OR AS A WHOLE WITHOUT THE WRITTEN PERMISSION OF FOXFAB POWER SOLUTIONS IS PROHIBITED.	UNLESS OTHERWISE SPECIFIED: DIMENSIONS ARE IN INCHES TOLERANCES: X ± .3 X.X ± .15 X.XX ± .06 X.XXX ± .03 ANGULAR ± 1 INTERPRET DIM AND TOL. PER: **ASME Y14.5**		THIRD ANGLE: / SIZE **B** / SCALE 1:8 / REV A
			ITEM NO. / DWG. NO. 250-80708 / SHEET 1 OF 1

REVISION				
REV.	ZONE	DESCRIPTION	DATE	DRAWNBY
A		INITIAL RELEASE	10/9/2025	A. AZAR

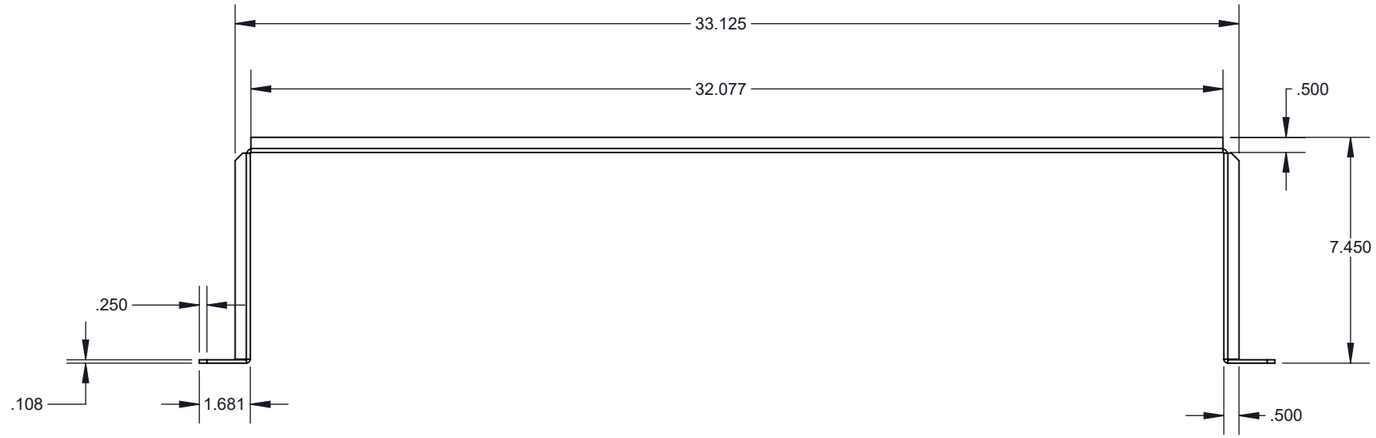

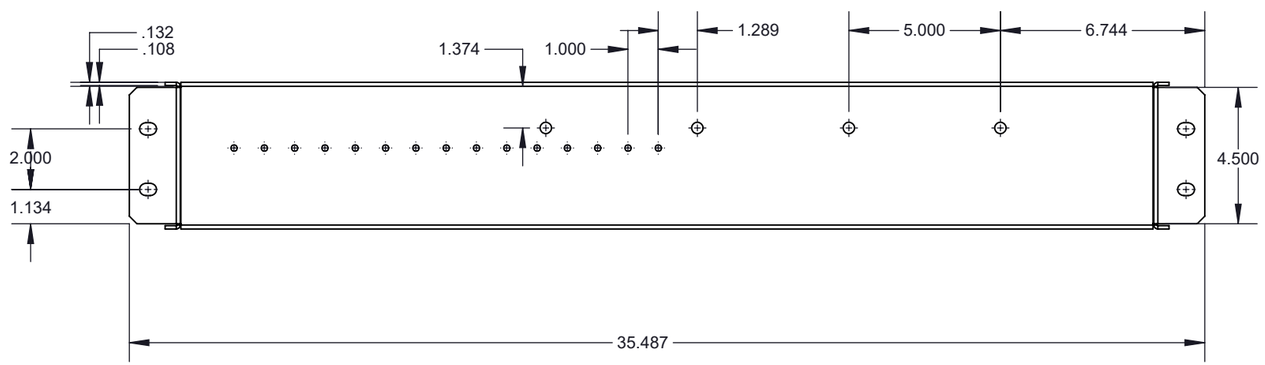

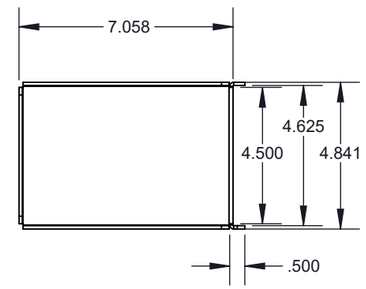

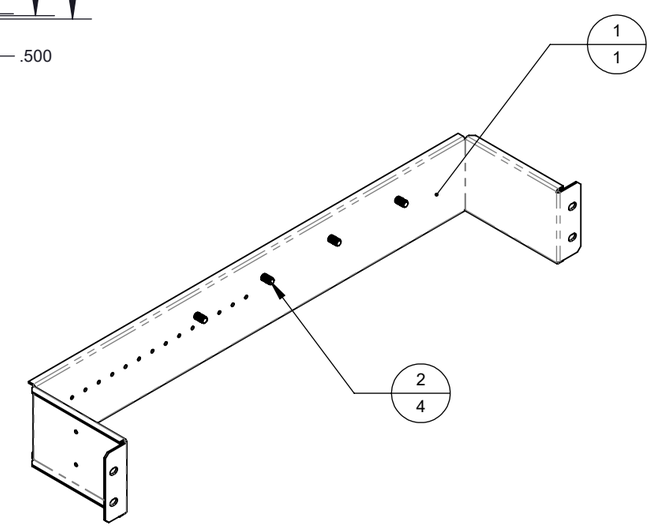

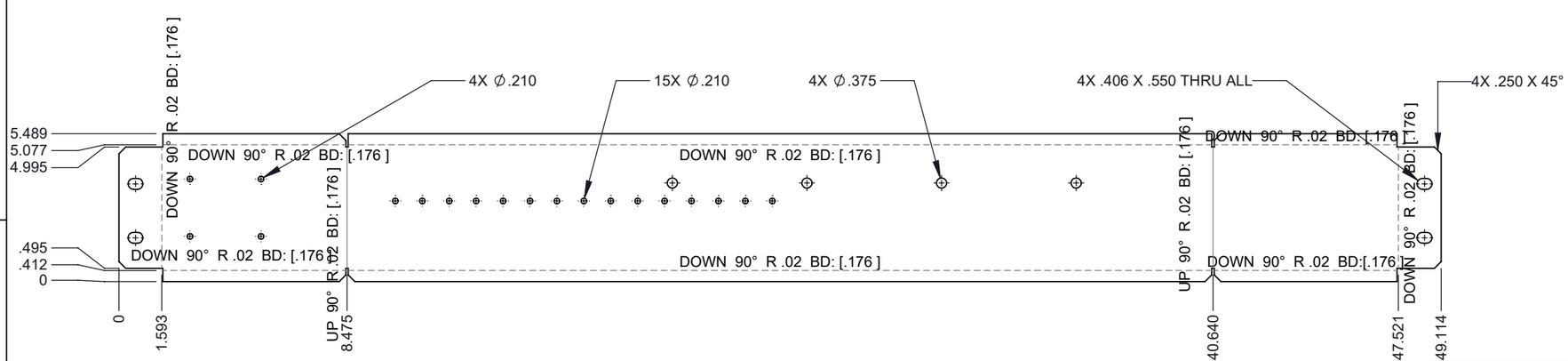

BILL OF MATERIAL			
ITEM NO.	PART NUMBER	DESCRIPTION	QTY.
1	250-80709	BRACKET, STANDOFF, 723630	1
2	PEM HFHS-0616-12		4

MATERIAL 8.24 lbs

FINISH BARE

PROPRIETARY AND CONFIDENTIAL

THE INFORMATION CONTAINED IN THIS DRAWING IS THE SOLE PROPERTY OF FOXFAB POWER SOLUTIONS ANY REPRODUCTION IN PART OR AS A WHOLE WITHOUT THE WRITTEN PERMISSION OF FOXFAB POWER SOLUTIONS IS PROHIBITED.

DRAWN BY AA | SAVED ON 10/10/2025

BD 0.176" | TOP DIE 1mm | BOTTOM DIE 16mm

UNLESS OTHERWISE SPECIFIED:
DIMENSIONS ARE IN INCHES
TOLERANCES:
X ± .25
X.X ± .1
X.XX ± .05
X.XXX ± .025
ANGULAR ± 1
INTERPRET DIM AND TOL. PER:
ASME Y14.5

Foxfab Power Solutions
2579-188 ST.
SURREY, BC V3Z 2A1
(604) 460 - 9310
WWW.FOXFAB.COM

TITLE: BRACKET, STANDOFF, 723630

THIRD ANGLE: | SIZE B | SCALE 1:8 | REV A

ITEM NO. | DWG. NO. 250-80709 | SHEET 1 OF 1

REVISION				
REV.	ZONE	DESCRIPTION	DATE	DRAWNBY
A		INITIAL RELEASE	10/9/2025	A. AZAR

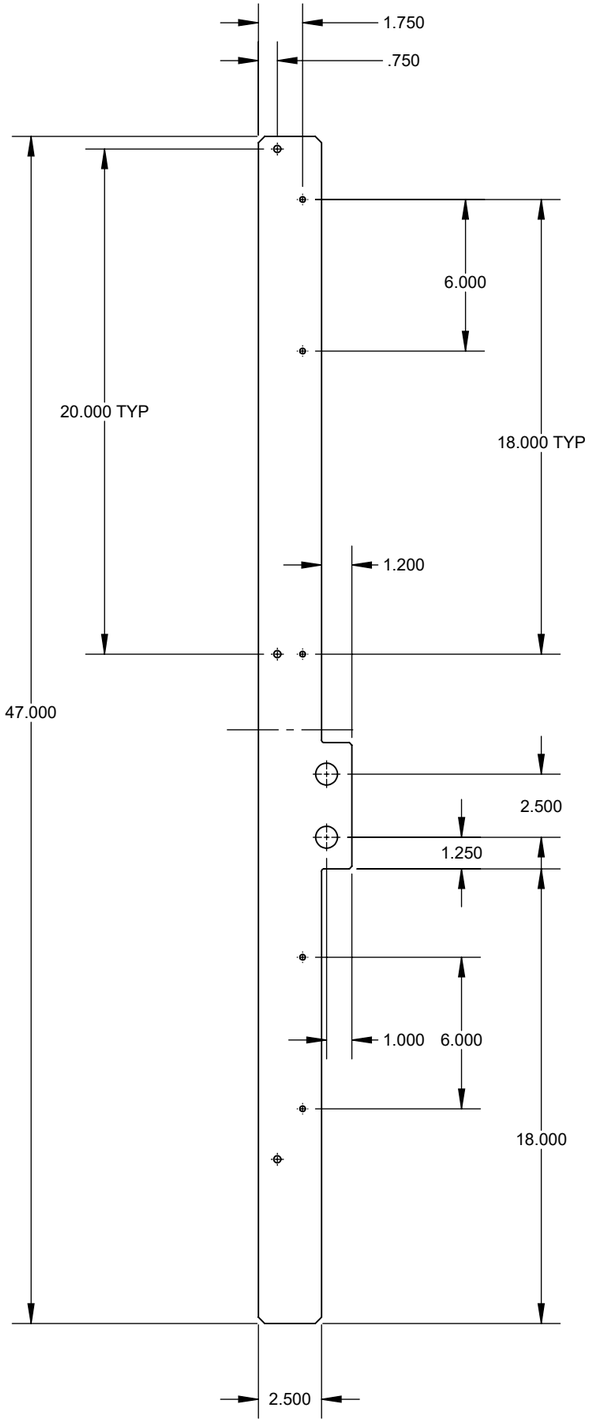

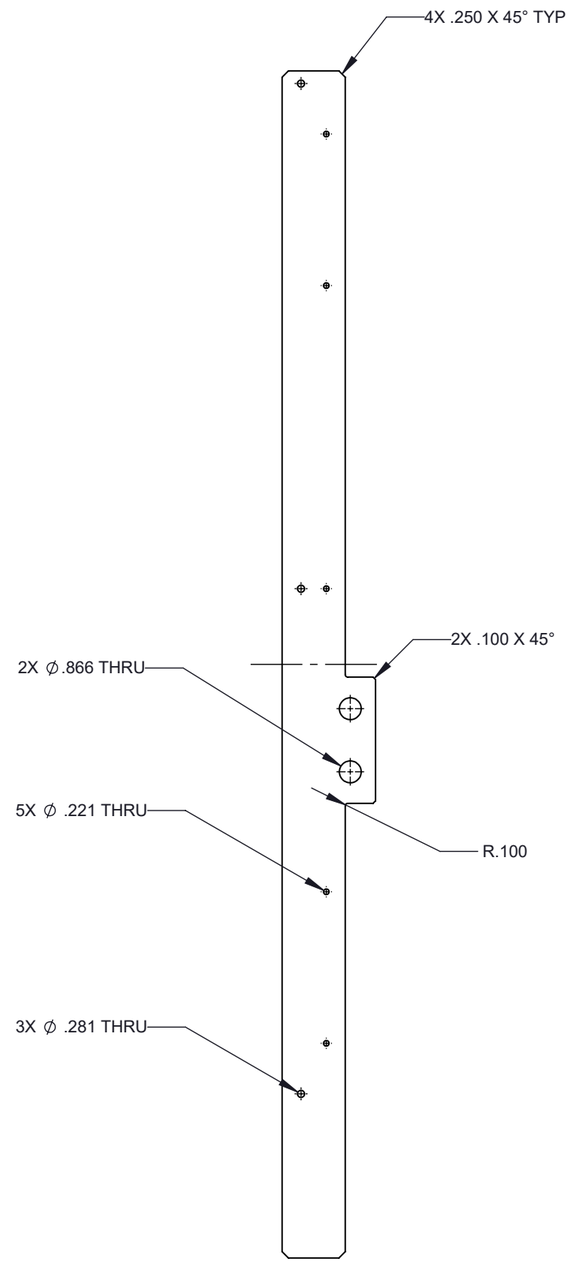

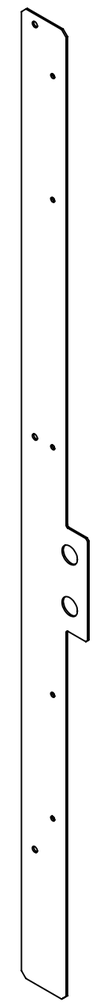

MATERIAL 2.72 lbs 0.079 Galvanized Steel	DRAWN BY AA	SAVED ON 10/9/2025	Foxfab Power Solutions 2579-188 ST. SURREY, BC V3Z 2A1 (604) 460 - 9310 WWW.FOXFAB.COM
FINISH BARE	BD - / TOP DIE - / BOTTOM DIE -		TITLE: FRAME, DEADFRONT MOUNT, 47" LENGTH
PROPRIETARY AND CONFIDENTIAL THE INFORMATION CONTAINED IN THIS DRAWING IS THE SOLE PROPERTY OF FOXFAB POWER SOLUTIONS ANY REPRODUCTION IN PART OR AS A WHOLE WITHOUT THE WRITTEN PERMISSION OF FOXFAB POWER SOLUTIONS IS PROHIBITED.	UNLESS OTHERWISE SPECIFIED: DIMENSIONS ARE IN INCHES TOLERANCES: X ± .25 X.X ± .1 X.XX ± .05 X.XXX ± .025 ANGULAR ± 1 INTERPRET DIM AND TOL. PER: **ASME Y14.5**		THIRD ANGLE: SIZE **B** SCALE 1:8 REV A
			ITEM NO. DWG. NO. 250-80710 SHEET 1 OF 1